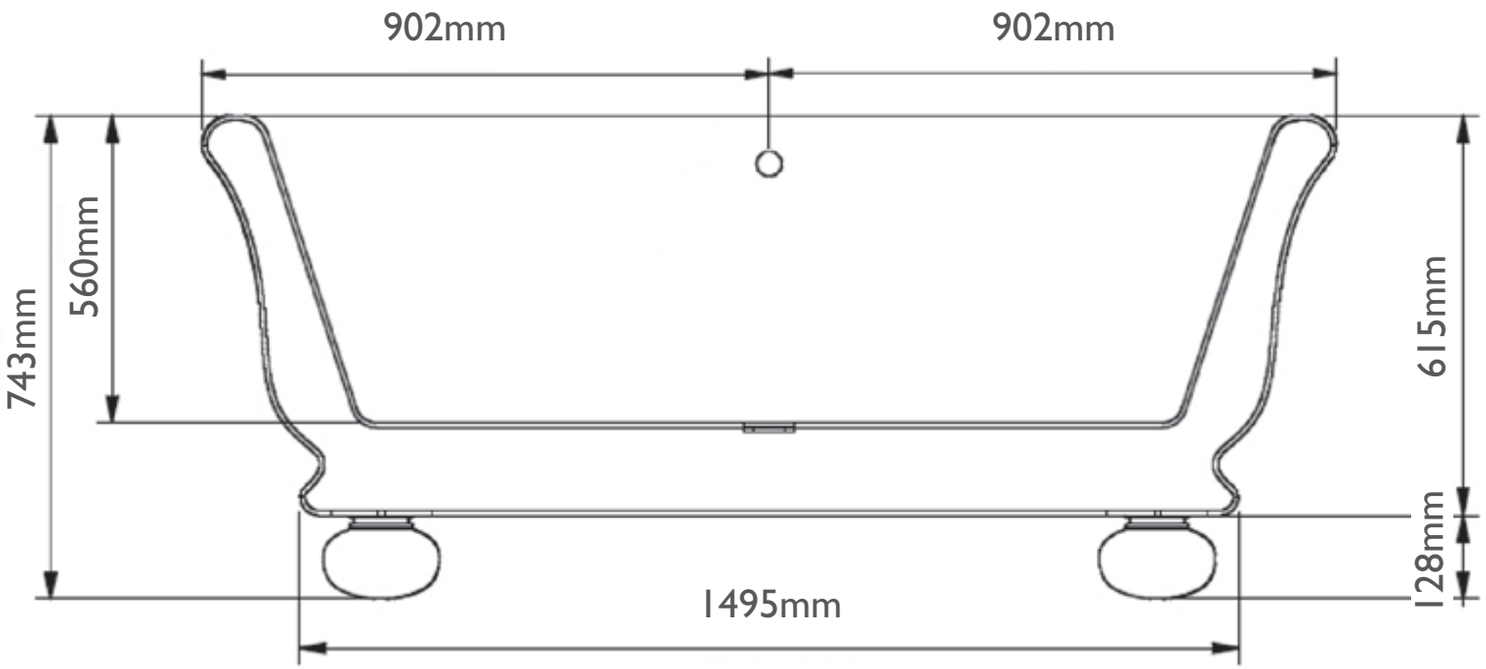
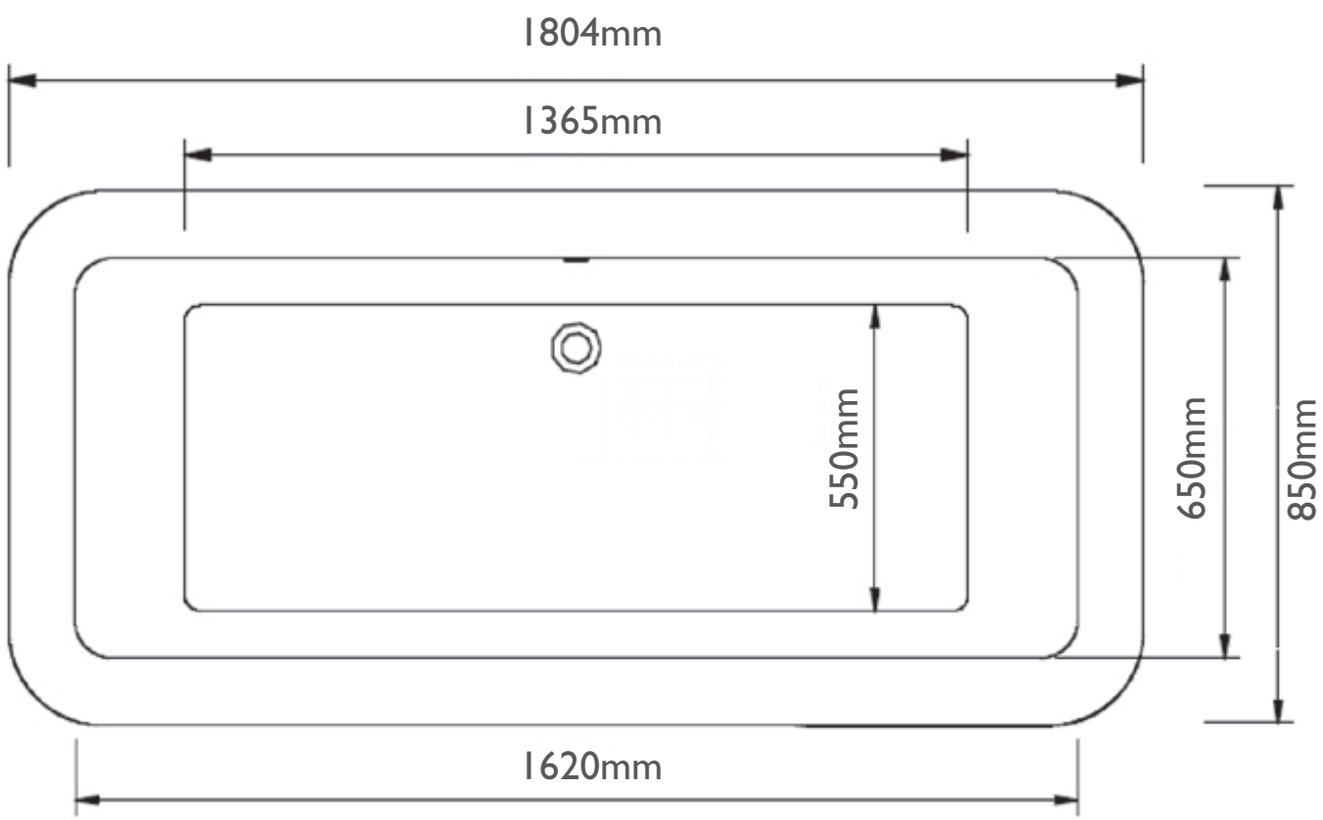
Dimensions can differ + /- 5%